Allied Bolt

Insulated Drop Wire Clamp

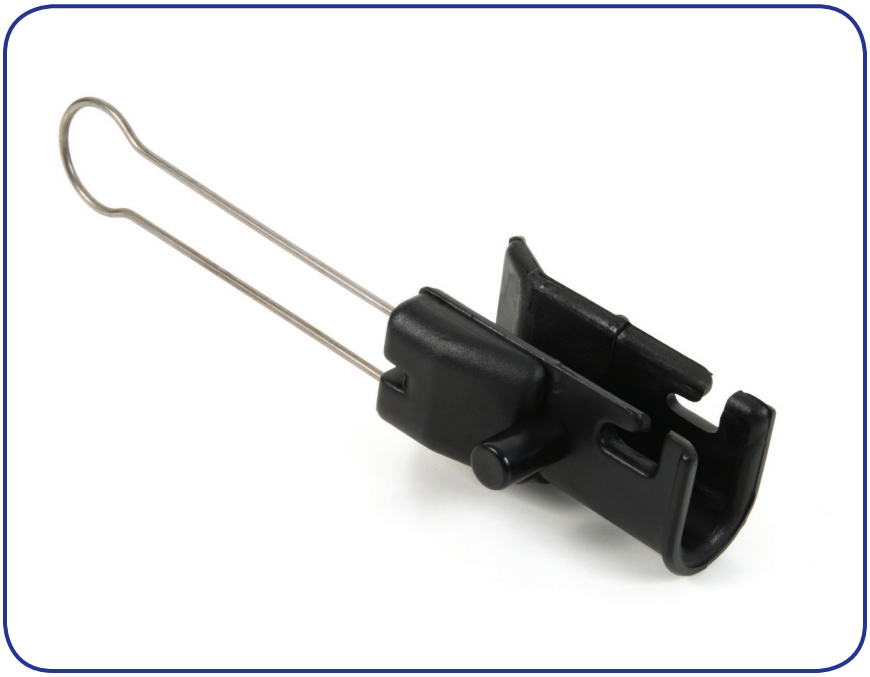

Features

- New product, currently in testing stage of development
- Designed to isolate electrical conductivity while resisting corrosion
- Comfortably accommodates RG-59, RG-6 and RG-11 cables

Application

The Insulated Drop Wire Clamp's non-conductive body features an isolation channel that retains the steel messenger wire at a fixed distance from the clamp's metallic bail. By isolating the messengered support wire, electrical current is prevented from arcing over and charging the bail of the drop wire clamp.

Section 830 of the National Electric Code (NEC) requires the support messenger of a powered residential drop cable to be either bonded to the strand or isolated at the home. The insulated drop wire clamp isolates power from reaching the subscriber's home if voltage is applied to the messenger support wire. In a series of independent lab tests, the average voltage necessary to arc over (electricity jumping from messenger support wire to bail wire) is 19(kV).3.

The insulated drop wire clamp accommodates messengered coaxial drop cables ranging in size from RG59 to RG11. The drop clamp is suitable for any drop cable up to ½" in diameter. The drop clamp accepts support wires up to ⅛" in diameter. The bail of the Insulated drop wire clamp is designed to accept P Hooks and other house attachments, and any span clamp suspending the service drop from the strand.

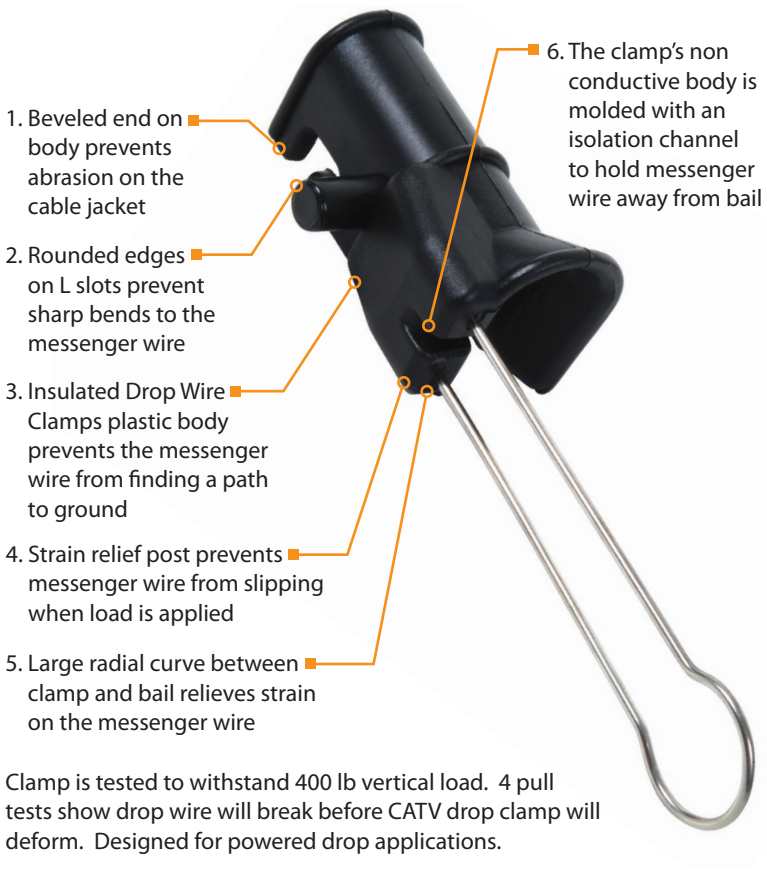

Clamp is tested to withstand 400 lb vertical load. 4 pull tests show drop wire will break before CATV drop clamp will deform. Designed for powered drop applications.

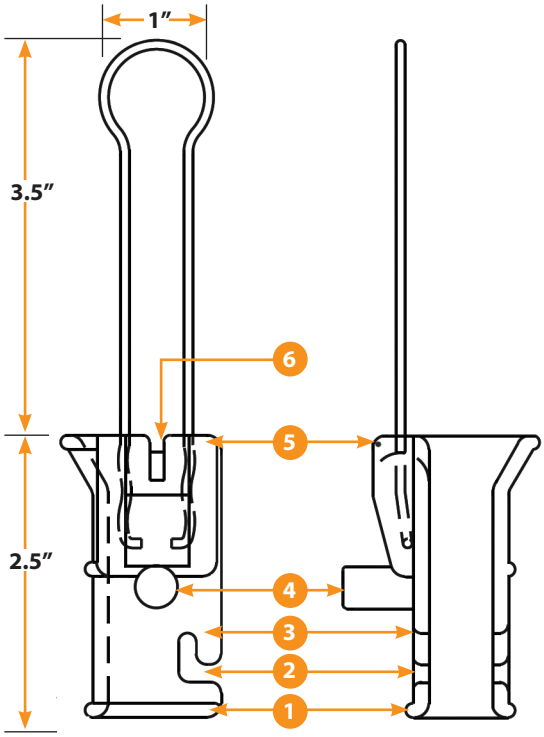

Material Specifications

- Body of clamp is molded from a durable high impact resistant UV stabilized resin (Nylon 6/6). The clamp is UV stability tested using SAE J1960 Rev. 2004-10.5. This is a recognized standard for testing weathering performance of black thermoplastic resins
- Bail wire is formed from corrosion resistant 430 Stainless Steel. The bail is malleable to mold and to fit over different sized attachments without losing strengthInstallation
- Place drop cable into U shaped channel of the drop clamp. Strip at least 12" of messenger support wire from drop cable. Wrap support wire over the radius between the bail wire arms and loop around strain relief post. Wrap remaining messenger through "L" shaped slots, around drop clamp body two times, and secure in "L" shaped slot.

Packaging

- To complete most aerial installations, two drop clamps are required. For convenience, clamps are packaged two per bag. Cartons contain 25 pairs. Installation instructions are printed on each bag.

Insulated Drop Wire Clamp

Instructions

1. Fit Figure 8 Drop Cable into the clamp, cable and messenger support wire separate by bail wire.
2. Strip messenger support wire from Drop Cable, Cut at least 12" to make the wrap.
3. Wrap one turn tightly around the strain relief post as close to the bottom as possible.
4. Pull taut and wrap messenger support wire around the clamp through "L" slots.
5. Wrap messenger support wire two turns around the clamp and bend the end back as shown.

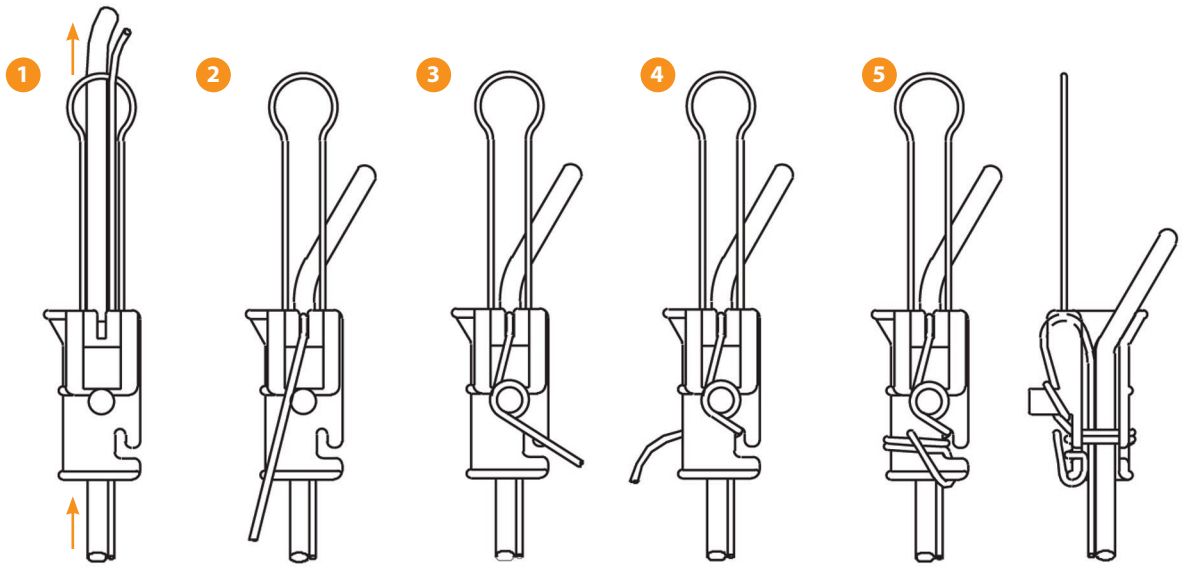

Ordering Information

ARRIS #	Mfg #	Description	Std Pkg	Carton Qty
716954	2099	Insulated CATV Drop Wire Clamp	2	50

Accessories

ARRIS #	Mfg #	Description	Std Pkg	Carton Qty
209716	9080	Span Clamp with Bail Washer	25	100
209033	4042	Q Span Clamp	25	100
209715	9082	House Hook with Bail Washer	200	200
209074	921	P House Hook 3¾"	200	200
209616	922	P House Hook 4½"	200	200
209034	905	S Clips for Messengered Coaxial Cable	200	200

Manufactured in the United States.

The capabilities, system requirements and/or compatibility with third-party products described herein are subject to change without notice. ARRIS, the ARRIS logo, Auspice®, C3™, C4®, C4c™, Cadant®, C-COR®, CHP Max®, ConvergeMedia™, Cornerstone®, CXM™, D5™, Digicon®, Flex Max®, Keystone™, MONARCH®, n5™, nABLE™, nVision®, OpsLogic®, OpsLogic® Service Visibility Portal™, PLEXiS®, PowerSense™, Regal®, ServAssure™, Service Visibility Portal™, TeleWire Supply®, TLX®, Touchstone®, VoiceAssure™, VSM™, and WorkAssure™ are all trademarks of ARRIS Group, Inc. Other trademarks and trade names may be used in this document to refer to either the entities claiming the marks and the names of their products. ARRIS disclaims proprietary interest in the marks and names of others. © Copyright 2009 ARRIS Group, Inc. All rights reserved. Reproduction in any manner whatsoever without the express written permission of ARRIS Group, Inc. is strictly forbidden. For more information, contact ARRIS.

ARRIS™

www.arrisi.com